YFZ450 Wiring Diagram

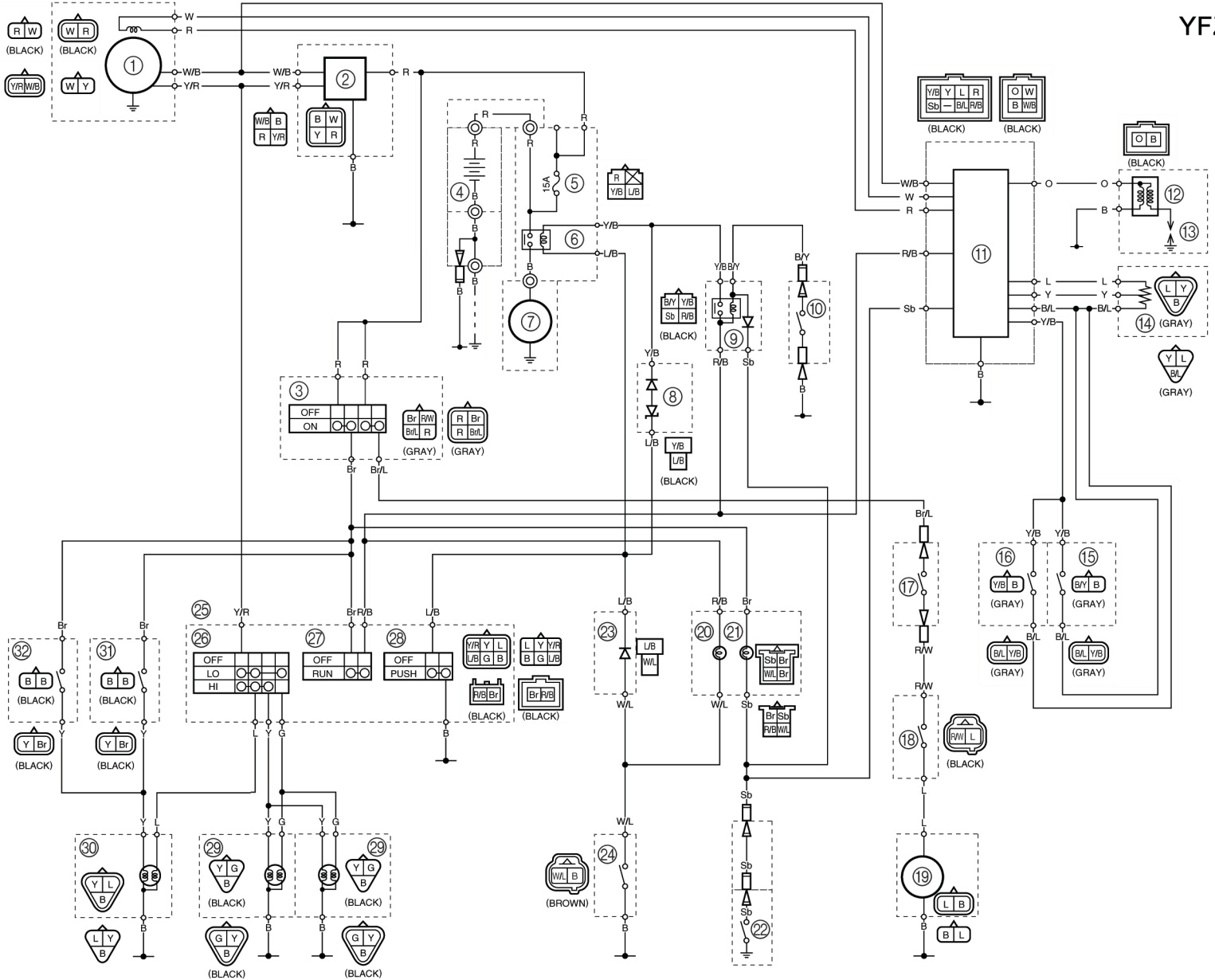

1. A.C. magneto
2. Rectifier/regulator
3. Main switch
4. Battery
5. Fuse
6. Starter relay
7. Starter motor
8. Diode 1
9. Starting circuit cut-off relay
10. Clutch switch
11. C.D.I. unit
12. Ignition coil
13. Spark plug
14. Throttle position sensor
15. Throttle switch
16. Carburetor switch
17. Circuit breaker (fan motor)
18. Thermo switch 1
19. Fan motor
20. Coolant temperature warning light
21. Neutral indicator light
22. Neutral switch
23. Diode 2
24. Thermal switch 2
25. Handlebar switch
26. Light switch
27. Engine stop switch
28. Start switch
29. Headlight
30. Tail/brake light switch
31. Rear brake light switch
32. Front brake light switch